Dino DC410Ri T4
SURFACE DRILLS

TECHNICAL SPECIFICATION

Dino DC410Ri is a hydraulic, self-propelled. self-contained, crawler based surface drilling unit with full radio remote control.

Typical applications for DC410Ri are road construction, demolition works, secondary breaking, foundation drilling and trenching. Therefore DC410Ri is most often used by construction contractors, quarries and the municipal sector. Due to its versatility DC410Ri is a perfect machine for drilling and blasting contractor.

KEY FEATURES

Hole diameter:	51 - 76 mm (2” – 3”)
Rock tools:	R32, T35, T38
Rock Drill	14 kW
Engine output:	105 kW (Tier4 final)
Flushing air:	3,5 m3/min, up to 8 bar
Production capacity:	600 - 1200 m3/8h
Total weight :	abt. 10 000 kg

ENG/METRIC. © Sandvik Mining and Rock Technology SANDVIK is a registered trademark owned by Sandvik Intellectual Property AB in Sweden and other countries.

HYDRAULIC ROCK DRILL

Rock drill	RD414
Rock tools	R32, T35, T38
Operating pressure	110 - 220 bar
Percussion rate	56 - 78Hz
Percussion output power	14 kW
Maximum rotation torque	680 Nm
Shank lubrication	Air / oil mist
Flushing	Air
Weight	180 kg

FEED

Feed type	Chain feed CF400
Total length	6900 mm
Rock drill travel	3800 mm
Max. length of starter rod	4270 mm (14')
Hole depth with starter rod	3510 mm
Hose reel	Standard
Feed extension travel	1300 mm
Feed/pull out force	15 kN
Feed swing	45/45°
Feed tilt	119°

ROD CHANGER

Rod changer type	RC400
Storage capacity	1 + 1
Rod length	14' + 10' + 10'
Max. hole depth	10 m +

BOOM

Boom type	DB410, articulated
Boom reach	5,2 m
Drilling coverage	18 m2
Boom swing	+/- 45°
Collaring height	+1,65 m / -4,15 m
Horizontal holes	forward only

POWERPACK

Engine type	Volvo Penta TAD570VE (Tier4 final)
DEF tank	AdBlue, 25 l
Number of cylinders	4
Engine output	105 kW
Transmission type	Gearbox
Screw compressor type	Enduro 12
Air filters	2 pcs
Fuel tank	210 l

HYDRAULIC SYSTEM

Number of gear pumps	3 pcs. for dust collector and cooling
Number of piston pumps	2pcs. for drilling, tramming, boom and rodhandling
Filtration rate	10 micron abs.
Cooling capacity	up to +50°C ambient
Hydraulic oil tank	235 l
Shank lubrication device	SLU 14-1

CONTROL SYSTEM

Control system type	Sandvik SICA, PLC controlled proportional electro- hydraulics
Tramming/boom/ drilling control	PLC controlled
User interface	Radio remote and screen
Control system diagnostics	Graphical flow chart diagnostic system
Drilling control system type	iTorque
Antijamming system	For rotation and flushing
Collaring control	Automatic
Preset drilling parameters	2 adjustable
Voltage	24 VDC

DUST COLLECTOR

Dust collector type	DC400H
Capacity/vacuum	16 m3/min at 855 mm vacuum H2O
Filter elements/material	9 pcs/fiber
Total filter surface	7,2 m2
Primary cyclone	na
Movable suction head	Standard

CARRIER

Track type	FL 4
Grouser plate width	250 mm
Ground contact length	2450 mm
Ground pressure	0.8 kg/cm2
Ground clearance	400 mm
Oscillation angles	+/- 10°
Tramming force	100 kN
Max. tramming speed	3,2 km/h

ENG/METRIC. © Sandvik Mining and Rock Technology. SANDVIK is a registered trademark owned by Sandvik Intellectual Property AB in Sweden and other countries.

STANDARD COMPONENTS

Rock drill RD414
Feed CF400
Rod handler
One rod add
Boom DB410
articulated
Carrier, track mounted
Power pack
diesel engine, hydraulic pumps and on-board compressor
Dust collector
DC400
Control system
radio remote control
Hydraulic system, electric load sensing
Gauge Set
For rock drill accumulators
Manuals
1 x paper copy
Manuals
1 x CD-ROM (Toolman)
Standard features:
Hose reel
Real time rock drill position
Stainless steel strips for feed
Safety cage for feed
Pressure filter for percussion line
Torque control
Led Lights 6 pcs
Oil heating circulation
Flushing control automatics
Shutdown of suction for waterholes

SELECTION OF OPTIONS

Spirit level angle indicator
TIM 5200 for vertical holes
TIM 5300 for vertical holes and depth measuring
TIM 6300 inclined holes, depth measuring and GPS aiming
TIM 6500 inclined holes, depth measuring, laser level and GPS aiming
Rod Handler (1+2)
Kit for alternative steels, each
SLU based thread greasing
Hydraulic roll-over DC410
Central lubrication system Sandvik
Electric fuel filling pump
Hydraulic winch
Electric engine heater and float charger 230 V
Fuel powered heater for engine, SLU and water tank (if selected)
Dustmizer with flap feeder
Flap feeder for dust collector
Grinder Sandvik RG400
Hydraulic connection for grinder
Spare radio remote transmitter
First service kit for DC410
Special tools for RD414, field kit
Service agreement - select level from extra item
SanRemo - select level from extra item

THE JAWS FOR DRILL STEELS

DRILL STEEL TYPE	DRILL STEEL DIAMETER	RECOMMENDED HOLE DIAMETER
R32	R32 / 32 mm	51 – 76 mm
T35	T35 / 39 mm	54 – 76 mm
T38	T38 / 39 mm	64 – 76 mm

ENG/METRIC. © Sandvik Mining and Rock Technology. SANDVIK is a registered trademark owned by Sandvik Intellectual Property AB in Sweden and other countries.

COVERAGE AREA AND DIMENSIONS

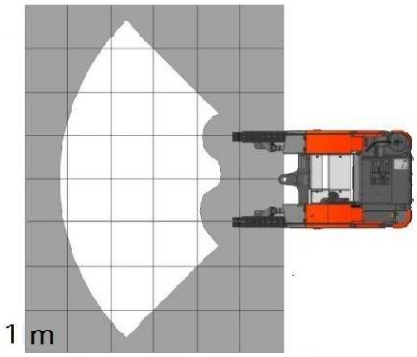

Vertical drilling

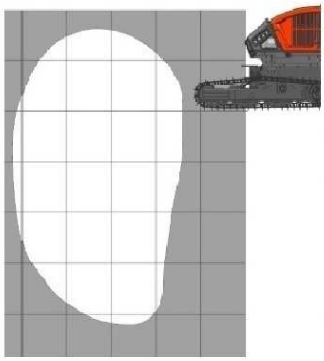

Vertical drillling

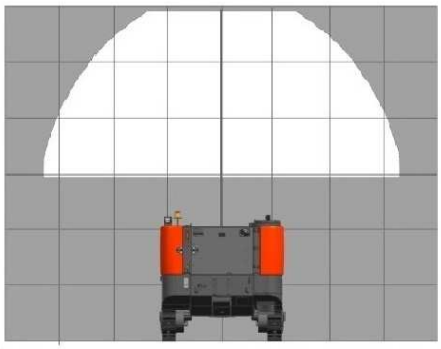

Horizontal drilling forward

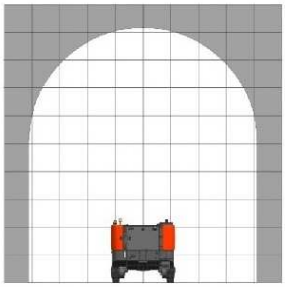

Bolting with roll-over

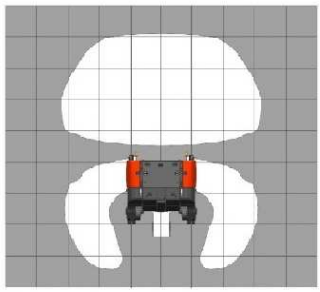

Face drilling with roll-over

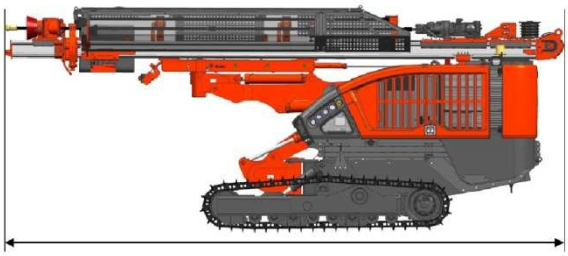

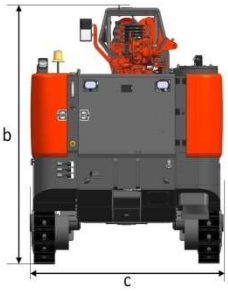

DIMENSIONS	
Weight	abt. 10 000 kg
Width	c, 2350 mm
Height	b, 2850 mm
With roll-over	b, 3000 mm
Total length	a, 6900 mm

Sandvik Mining and Rock Technology reserves the right to make changes to the information on this data sheet without prior notification to users. Please contact a Sandvik representative for clarification on specifications and options.

CONSTRUCTION.SANDVIK.COM

ENG/METRIC. © Sandvik Mining and Rock Technology. SANDVIK is a registered trademark owned by Sandvik Intellectual Property AB in Sweden and other countries.